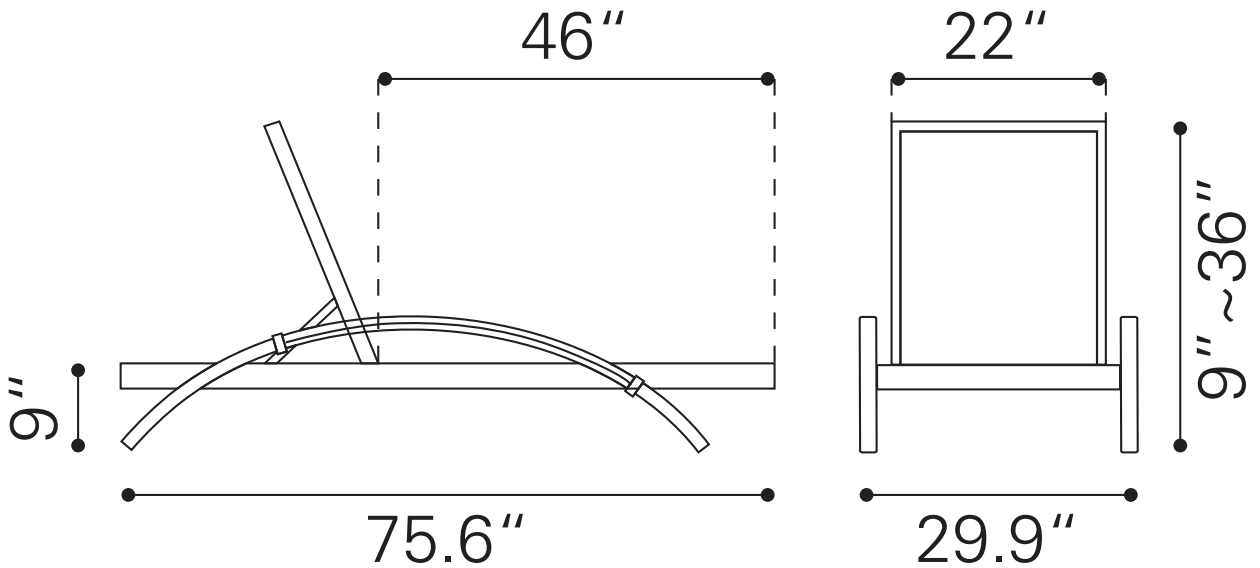
46"
22"
9"
9"~36"
75.6"
29.9"