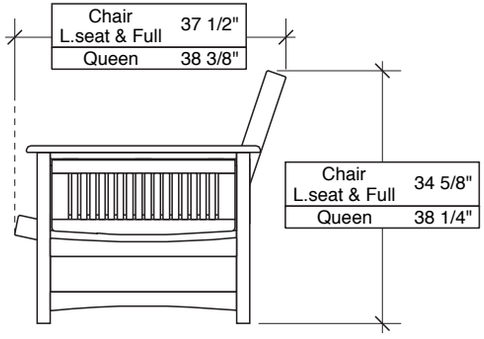

SEATING POSITION

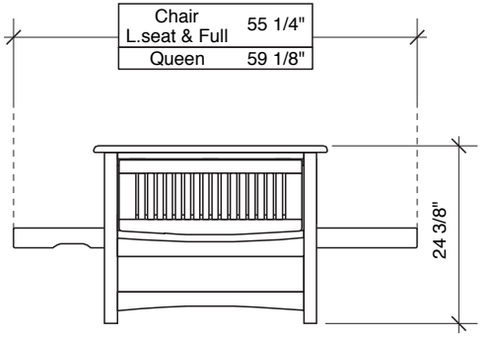

BED POSITION

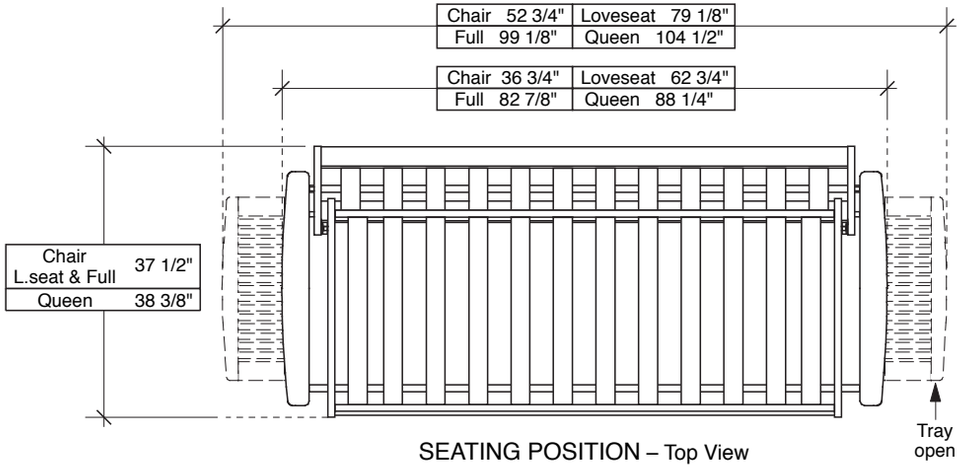

SEATING POSITION – Top View

Shoefittings™ Gold System Arms (Box 1)

		H	W	L	m3		Net	Gross
Sunrise	mm	170	710	895	0.108 m3	Kg	20.5	22
	inches	6 3/4"	28"	35 1/4"	3.81 cu.ft.	lbs	45	48

Shoefittings™ Gold System Body (Box 2)

		H	W	L	m3		Net	Gross
Chair	mm	130	800	855	0.089 m3	Kg	14	15
	inches	5 1/8"	31 1/2"	33 5/8"	3.14 cu.ft.	lbs	31	33
Loveseat	mm	130	840	1470	0.161 m3	Kg	25	27
	inches	5 1/8"	33 1/8"	57 7/8"	5.67 cu.ft.	lbs	55	59
Full	mm	125	840	1975	0.207 m3	Kg	35	37
	inches	4 7/8"	33 1/8"	77 3/4"	7.32 cu.ft.	lbs	77	81
Queen	mm	125	945	2110	0.249 m3	Kg	38	40
	inches	4 7/8"	37 1/4"	83 1/8"	8.80 cu.ft.	lbs	84	88

Assembled Product Dimensions*

Carton Dimensions*

PREMIUM COLLECTION

Sunrise

Night & Day Furniture
www.nightanddayfurniture.com

1501 NE 106th Street Vancouver WA 98686
Tel: (360) 573-3309 Fax: (360) 573-3326

SHOE FITTINGS™ Gold
The Futon Operating System of Choice

*Please note. The above weights and measures may be subject to change without notice.